Construction and comissioning of the Forward Diffractive Detector

Vojtěch Zabloudil[1]

[1]Faculty of Nuclear Science and Physical Engineering
Czech Technical University in Prague

September 14, 2021

Table of Contents

The Forward Diffractive Detector: general information

- Scintillation detector covering forward rapidities, successor of AD with faster materials + LCS
- FDD physics goals
  - Selecting diffractive processes
  - Tagging photon-induced processes
- Other contributions
  - Multiplicity and centrality determination
  - Beam quality monitor and luminometer
- The construction of FDD carried out in our laboratory at KF

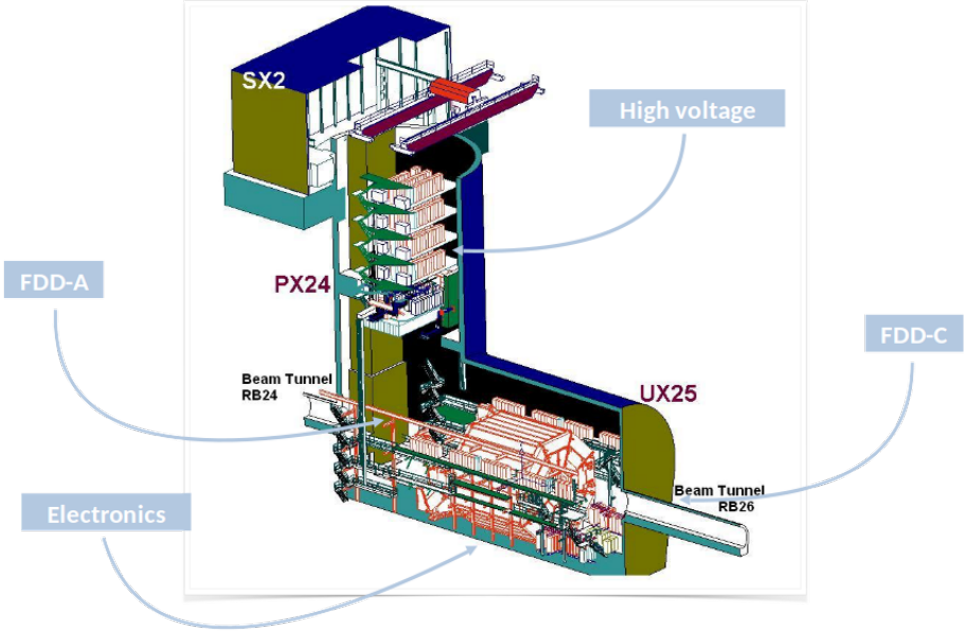

Figure: Layout of FDD at ALICE

The Forward Diffractive Detector: structure

- Located at both sides from the interaction point: FDD-A and FDD-C (difference only in the size of the cut-out)
- Two layers consisting of 4 quadrants each
- Light from the scintillators (grey) is collected in the wavelength-shifting bars (green), then transferred via optical fibres (blue) to the photomultiplier tubes (red), where a signal is produced

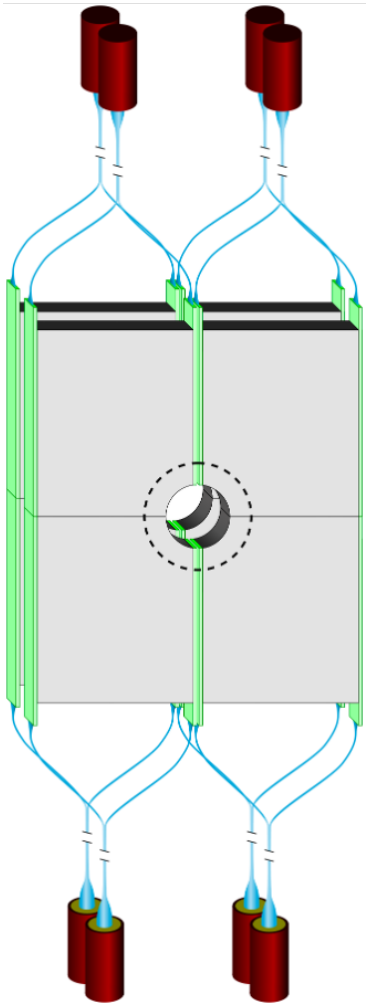

Figure: Schematic drawing of FDD

Construction of FDD: pads

- Fishing line is glued to the WLS bars used as a spacer between the WLS bars and scintillator
- WLS bars are glued to the scintillator by Araldite glue

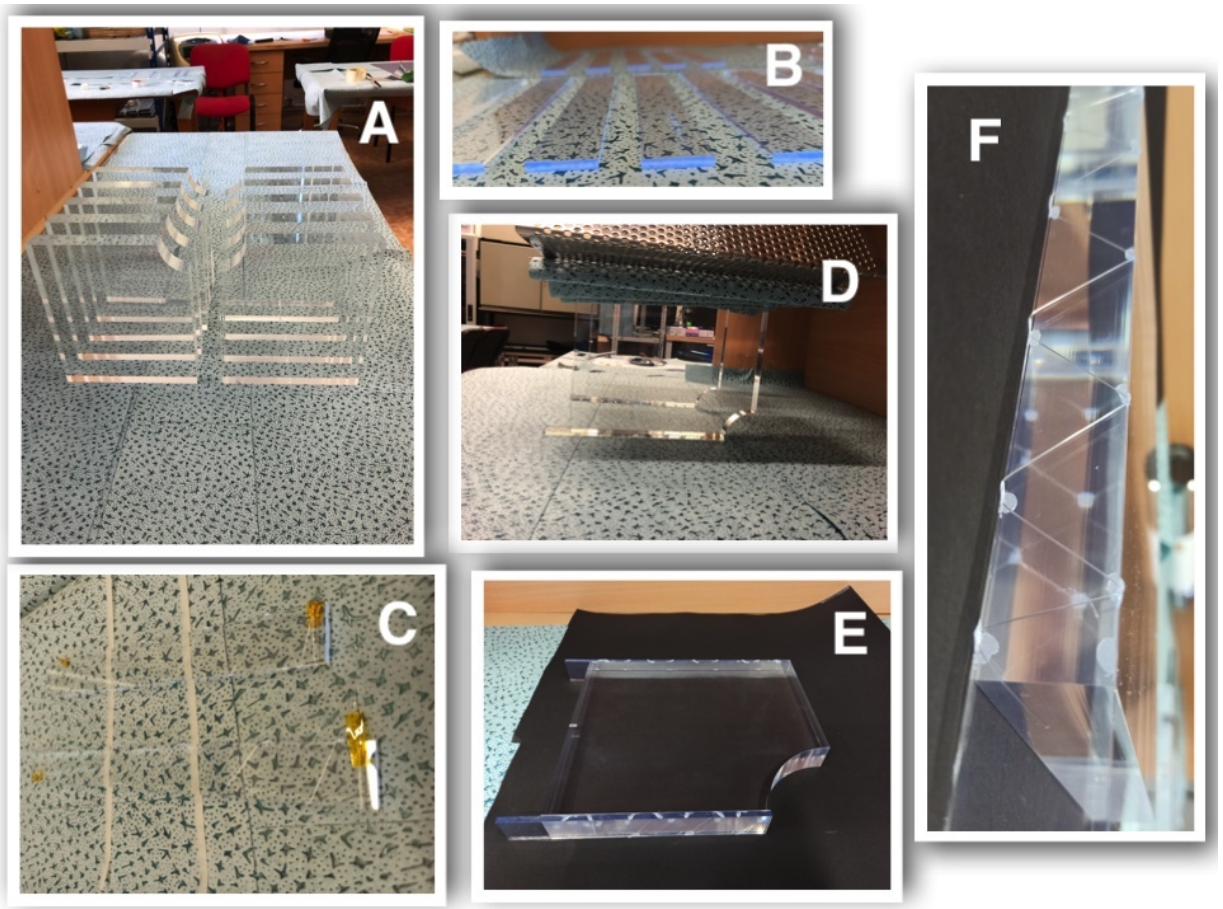

Figure: Glueing of the WLS bars to the scintillator

Construction of FDD: reflective covering

- Used primarily to avoid light leaks inside of the scintillator
- Two layers of reflective covering made of aluminium foil attached by Capton tape

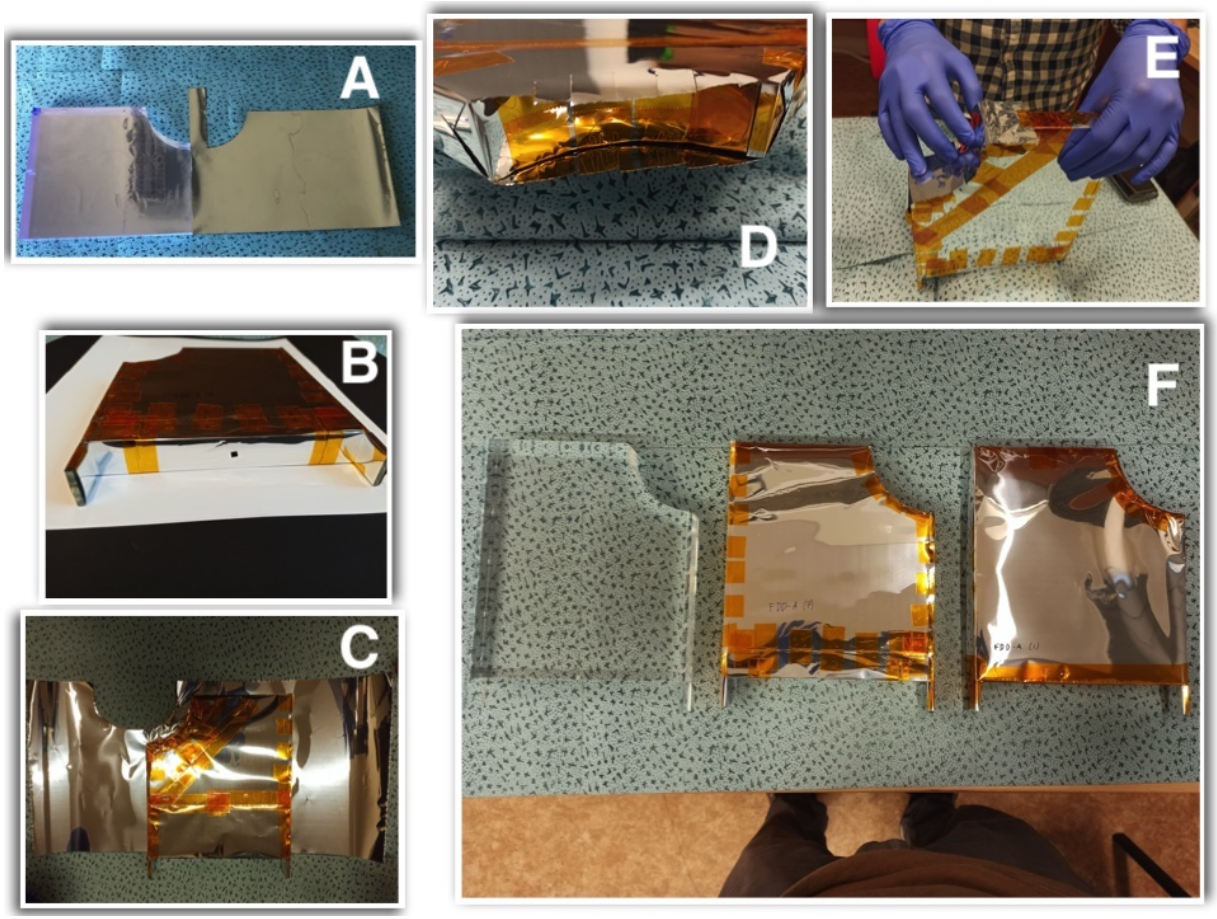

Figure: Wrapping of the pad with reflective cover

Construction of FDD: protective covering

- Used to provide basic protection mainly during transport and installation
- Each side covered by aluminium plate attached by aluminium tape

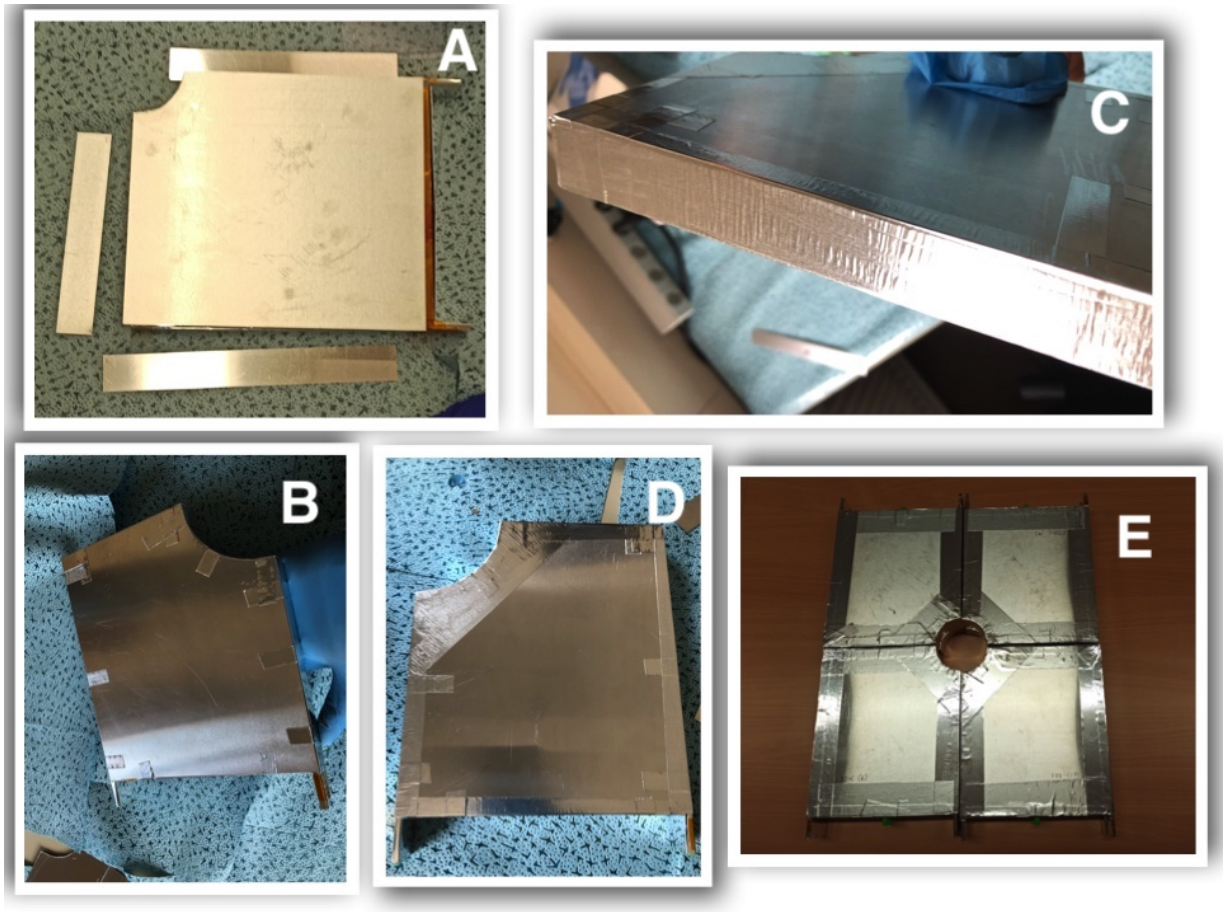

Figure: The process of protective covering

Construction of FDD: fibres

- Bunches of 96 optical fibres enclosed by termofit cover
- Shape of the endings adjusted: rectangular for WLS bars and cicular for the PMTs
- Teflon moulds, optical glue

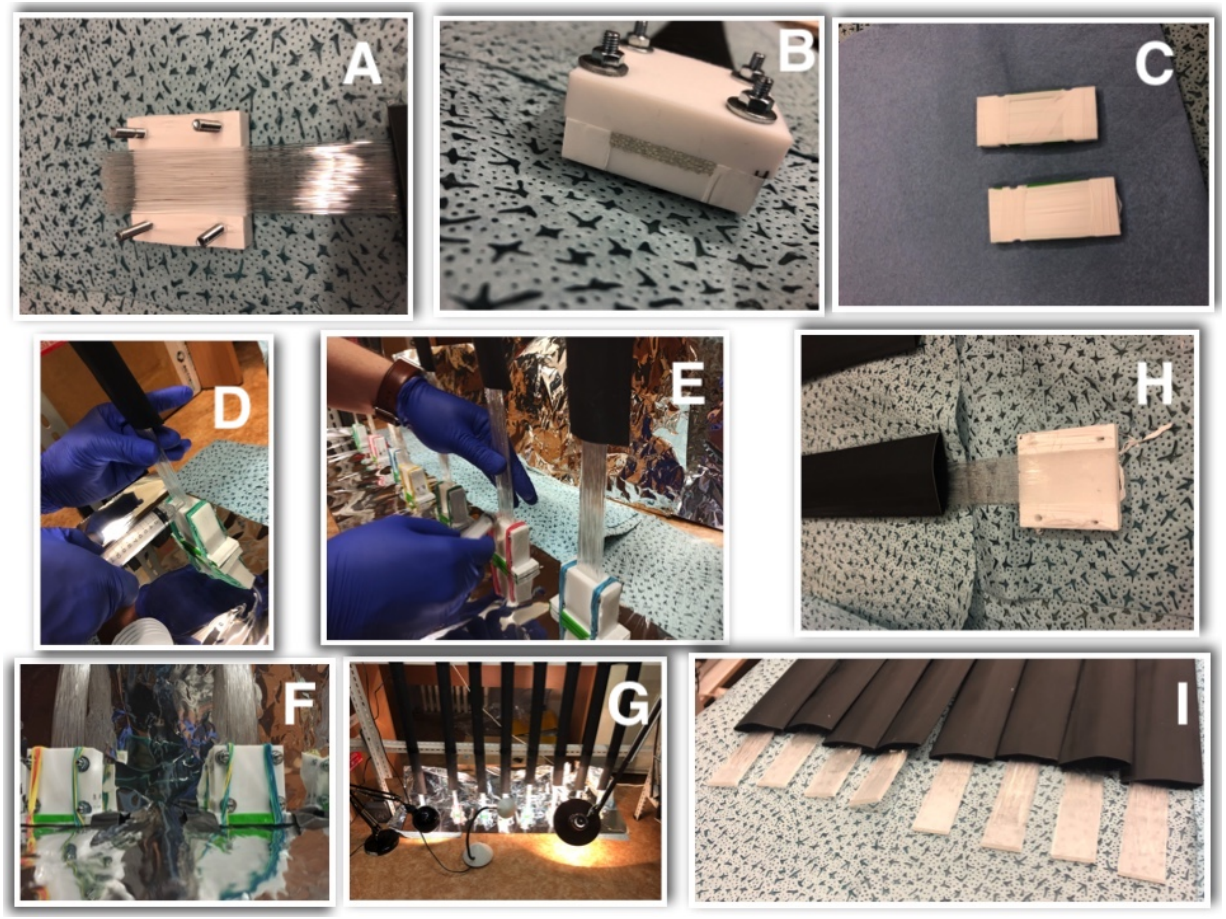

Figure: Process of protective covering

Characterisation of the FDD photomultiplier tubes: laser

- In order to choose the best-performing PMTs for the installation
- Done by irradition of the PMTs with low-intensity light at different voltages
- Measuring the relative amplitude and charge gain with respect to the reference PMT kept at a constant voltage

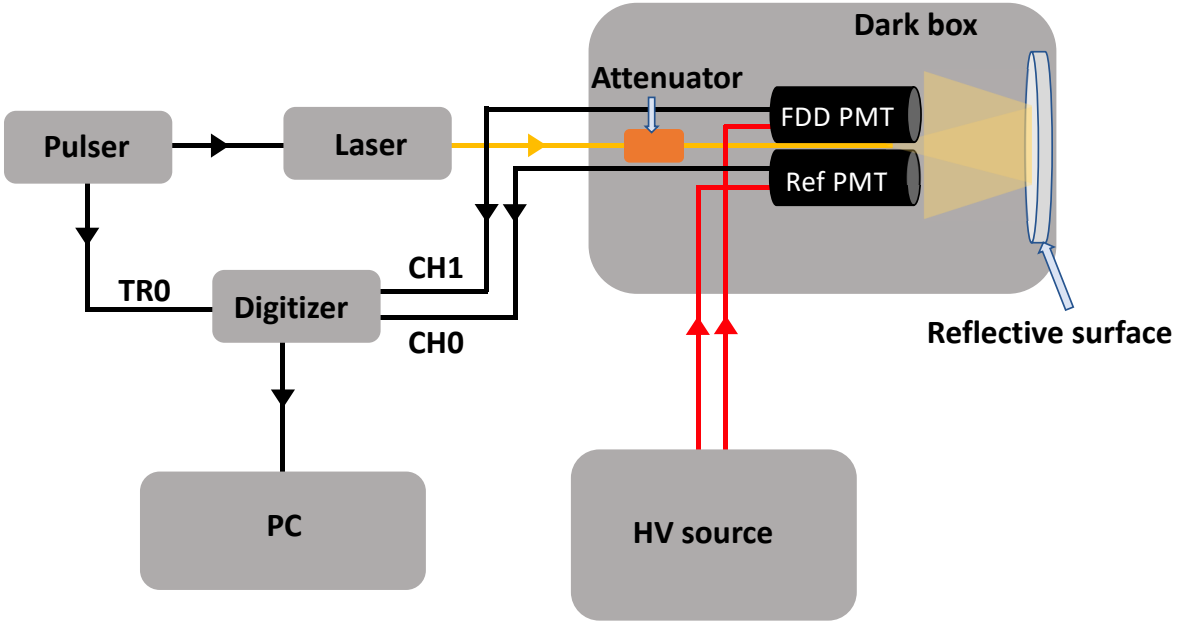

Figure: Setup used for the characterisation with laser

Characterisation of the FDD photomultiplier tubes: cosmic muons

- Done at CERN
- Two scintillators used as a coincidence trigger
- Method independent of any settings apart from the voltage
- Measuring the amplitude and charge gain with respect to the voltage

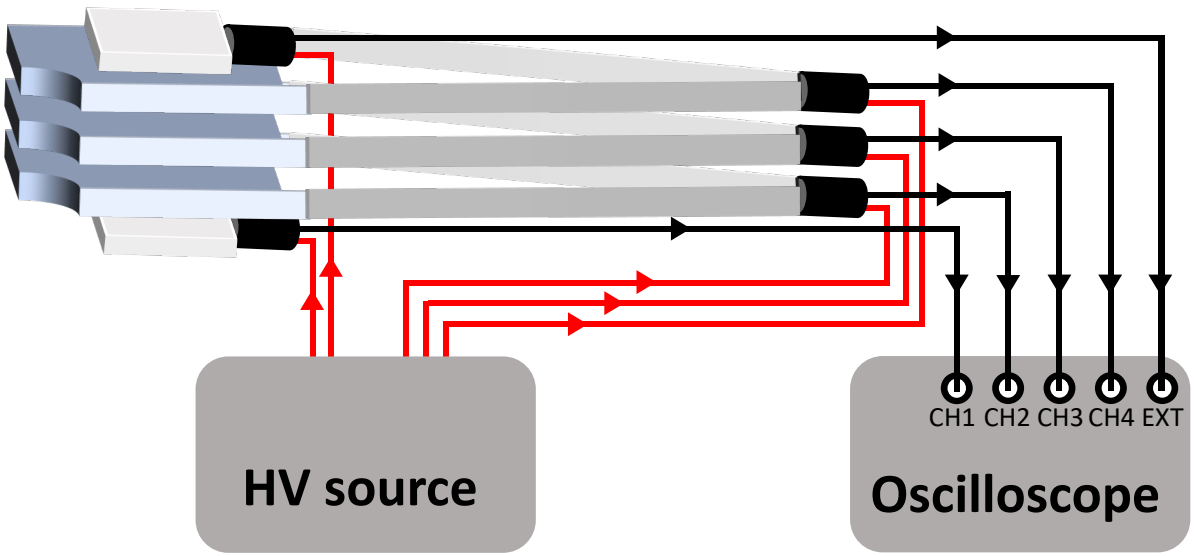

Figure: Setup used for the characterisation with cosmic muons

Data analysis and results

- Fitting of the amplitude and charge histograms with Gaussian distributions
- Plotting of the amplitude and charge with respect to the voltage
- Calculating the amplitude corresponding to 8 mV/MIP
- Choosing the best PMTs not only by the fit parameters but also regarding the PMT behaviour

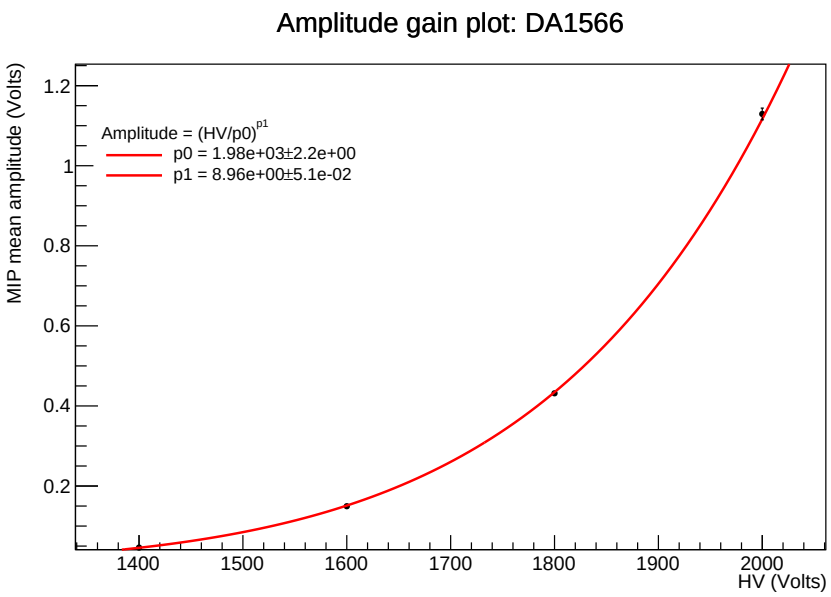

Figure: Amplitude gain plot of DA1566

Installation of FDD-C in the LHC tunnel

- Pads are located in the tunnel while the PMT box is in the cavern
- Pre-assembly of the pads into supporting frame
- Four steps: fixing of the supporting frame, pulling the fibers through the hole to the cavern, attaching the PMTs to the box, and connecting the optical fibres to the PMTs
- Installed in February 2021

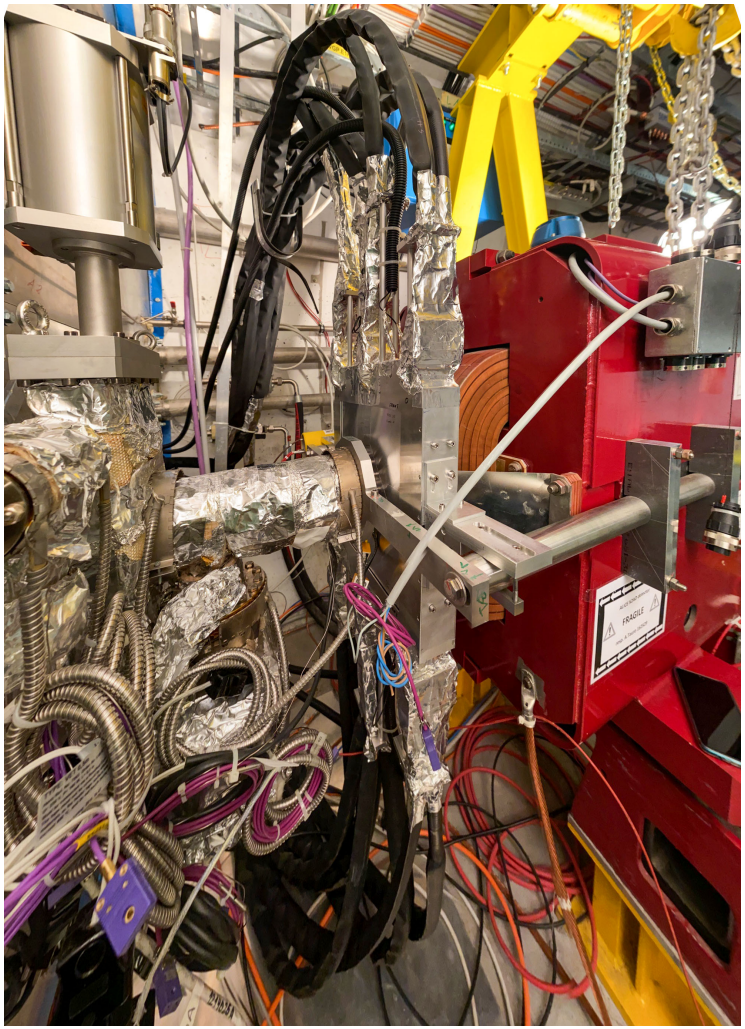

Figure: FDD-C after the installation

Installation of FDD-A in the ALICE cavern

- Similar to the installation of FDD-C
- Everything located in the tunnel $\rightarrow$ shorter fibres but much less space
- Installation together with the LCS components for FDD-A and FDD-C
- Installed in July 2021

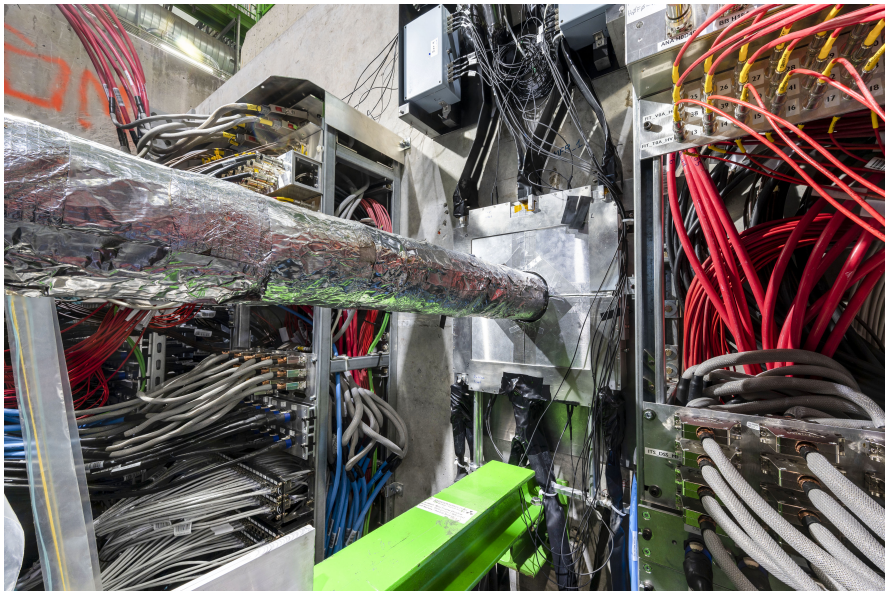

Figure: FDD-A after the installation

Summary and outlook

- General information about FDD and its structure was provided
- Brief description of the construction and characterisation of the FDD PMTs following with the installation of FDD in ALICE
- Next steps
  - Connecting of FDD to the rest of the electronics
  - Participate in pilot pp data-taking in October 2021

Figure: Part of the FDD installation team (Vojtěch Zabloudil a Solangel Rojas Torres)